MODEL A58HE – ETHERNET ABSOLUTE ENCODER

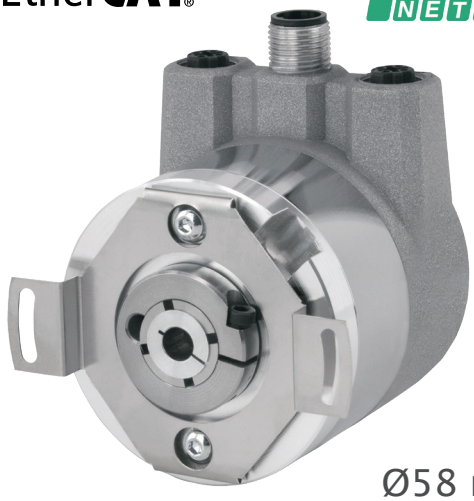

FEATURES

Single/Multi-Turn Absolute Encoder (16 Bit ST / 43 Bit MT)
Available in two industrial Ethernet protocols:
- **EtherCAT with CoE, FoE, EoE – device profile: CiA DS-406 V4.0.2, Class 3**
- **PROFINET I-O (CC-C) – device profile: switchable V4.1, Class 3, 4**

Maintenance-free and environmentally-friendly magnetic design
Energy-harvesting magnetic multi-turn technology
No gears or batteries
Low TCO and easy provisioning with internal web server
Color LEDs for operating condition, bus status, link activity
Compact design with bus cover
58 mm (2.28") diameter package

COMMON APPLICATIONS

Robotics, Telescopes, Antennas, Medical Scanners, Wind Turbines, Elevators, Lifts, Motors, Automatic Guided Vehicles, Rotary and X/Y Positioning Tables

EPC Absolute Encoder with Ethernet connectivity

The Model A58HE is an EtherCAT or PROFINET-ready, multi-turn absolute encoder designed for harsh factory and plant environments. It is particularly suited to applications where Ethernet-based connectivity is required, and the encoder must retain position information after power-off events. Easily designed into a wide variety of system applications, the Model A58HE plugs directly into your network with minimal provisioning for rapid deployment, facilitating data exchange among myriad networked devices. The Model A58HE retains absolute position information even after a power loss, facilitating speedy system recovery at start-up without the need for system re-homing.

Ready for Industry 4.0 and for the Industrial Internet of Things (IIoT), data exchange between the Model A58HE and other applications has no influence on the control loop. The Model A58HE is non-reactive and can work independently from the PLC or master, transferring data through network gateways to other automation networks and sites, and up to the cloud for analysis.

MODEL A58HE ORDERING GUIDE

Blue type indicates price adder options.

Mechanical | Electrical

A58HE	–	06	SR	–	16	43	EC	U	B	V4	–	RNB

MODEL
A58HE Absolute Series Hollow Bore (Blind)

BORE SIZE
06 6 mm
07 7 mm
08 8 mm
10 10 mm
12 12 mm
14 14 mm
15 15 mm
A5 0.250", 1/4"
A9 0.375", 3/8"

MOUNTING TYPE
SR 63 mm BC 2-pt. Flex Mount

SINGLE TURN RESOLUTION[1]
16 Single Turn

MULTI-TURN RESOLUTION[1]
00 Single Turn[2]
43 Multi-Turn

COMM PROTOCOL
EC EtherCAT
PN PROFINET

SOFTWARE REV
U Revison U (EtherCAT only)
W Revison W (PROFINET only)

OUTPUT CODE
B Binary

VOLTAGE
V4 10V - 32V

CONNECTOR TYPE[3]
RNB RNB Bus Cover with 3xM12

EtherCAT (Ethernet for Control and Automation Technology) is a registered trademark and patented technology, licensed by Beckhoff Automation GmbH, Germany.
PROFINET is a registered trademark and patented technology, licensed by PI (PROFIBUS & PROFINET International).

NOTES:
1 Customer configures at setup.
2 Single turn encoders cannot be configured for multi-turn resolution.
3 For mating connectors, cables, and cordsets see Accessories at encoder.com.

MODEL A58HE SPECIFICATIONS

Electrical

Power Supply ..... 10 VDC up to 32 VDC
Current Consumption ..... typ. 125 mA
Power Consumption..... typ. 3 W

Sensor Specification

Internal Cycle Time .. 50 µs
Resolution
- Single Turn ..... up to 65,536 steps/360° (16 bit)
- Multi-Turn ..... 43 bit

Accuracy
- Single Turn ..... ± 0.0878° (≤ 12 bit)
- Single Turn, Repeat Accuracy..... ± 0.0878° (≤ 12 bit)

Technology
- Single Turn ..... Innovative Hall-sensor technology
- Multi-Turn ..... Patented energy-harvesting technology, no battery and no gears

Turn on time ..... < 1.5 s

Interface

Interface ..... Industrial Ethernet
Protocol ..... EtherCAT or PROFINET-IO (CC-C)
Device Profile ..... EtherCAT: CiA DS-406 V4.0.2, Class 3; PROFINET: V4.1, Class 3, 4
Data Transfer 100BASE-TX
Cycle time..... EtherCAT: up to 50 µs
PROFINET: 250 µs, applicable for up to 125 µs
Code ..... Binary, CW default, programmable
Programmable Parameters..... Steps per revolution; counts of revolution; preset; scale; counting direction
EtherCAT: 2x 8 cam switches; DC-Mode
PROFINET: MRPD; MRP; LLDP; IRT
Diagnostic LED ..... Traffic and connection management: L/A1: Port 1 (IN) L/A2: Port 2 (OUT)
Status LED ..... STAT, MOD: status of encoder and bus

Mechanical

Flange..... Blind hollow bore
Flange Material ..... Aluminum
Shaft Material ..... Stainless steel
Shaft Length ..... 17 mm
Insertion depth
- min ..... 10 mm
- max ..... 19 mm

Housing Cap ..... Steel case chrome-plated, magnetic shielding
Connection Cover .... Die cast aluminum, powder coated
Weight..... 14.462 oz / 410 g approx
Shaft Rotation ..... Bi-directional
Max Radial Shaft Load ..... 80 N (17.9 lb)
Max Axial Shaft Load..... 50 N (11.2 lb)
Starting Torque ..... Approximately 1.6 Ncm (2.226 oz-in) at ambient temperature.
Max Shaft Speed..... 6000 RPM

Bearings

Type..... 2 precision ball bearings
Nominal Service Life ..... 1×10^9 revs. at 100% rated shaft load
1×10^{10} revs. at 40% rated shaft load
1×10^{11} revs. at 20% rated shaft load

Environmental

Operating Temp ..... -40° to 85° C
Storage Temp ..... -40° to 100° C
Sealing..... IP65 tested per EN 60529
ESD ..... 8 kV tested per EN 61000-4-2
Burst ..... 2 kV tested per 61000-4-4
EMC..... EN 61000-6-2; EN 61000-6-3
Vibration..... 200 m/s² (10 Hz up to 1000 Hz) (20.3 g [10Hz up to 1000 Hz]) tested per EN 60068-2-6
Shock..... 5000 m/s² (6 ms) 509.8 g (6 ms) tested per EN 60068-2-27
Design..... According to DIN VDE 0160

NETWORK BUS CONNECTOR PINOUT

Bus cover with 3x M12x1. For EPC-supplied mating cables, wiring table is provided with cable. Trim back and insulate unused wires.

Female Connector Port1 (IN)

Function	M12x1, 4-pin, D-coded
Tx+	1
Rx+	2
Tx-	3
Rx-	4

Power

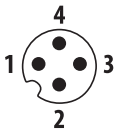

Function	M12x1, 4-pin, A-coded
(+) Vcc	1
n. c.	2
GND	3
n. c.	4

Female Connector Port2 (OUT)

Function	M12x1, 4-pin, D-coded
Tx+	1
Rx+	2
Tx-	3
Rx-	4

MODEL A58HE 63 MM 2 PT. FLEX MOUNT (SR)

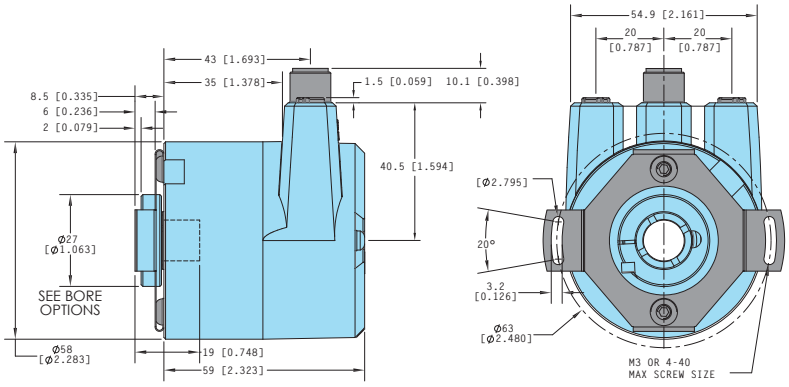

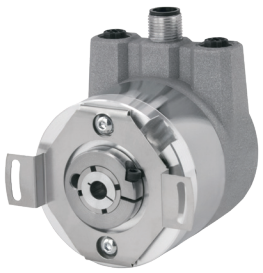

Primary dimensions are in mm, secondary dimensions SI units [inches] in brackets for reference only.

EPC RESERVES THE RIGHT TO UPDATE, REVISE AND AMEND ALL SOFTWARE AND TECHNICAL DATA OR CONTENT AT ANY TIME. EPC SHALL HAVE NO LIABILITY OF ANY KIND OR NATURE FOR ANY TECHNICAL ERRORS OR OMISSIONS IN ANY SOFTWARE OR TECHNICAL DATA. See encoder.com for more information.